Installation and Operating Instructions

Bolt-assembled hopper
5970x2835 (6x3m)

408125 (en) 10-2026

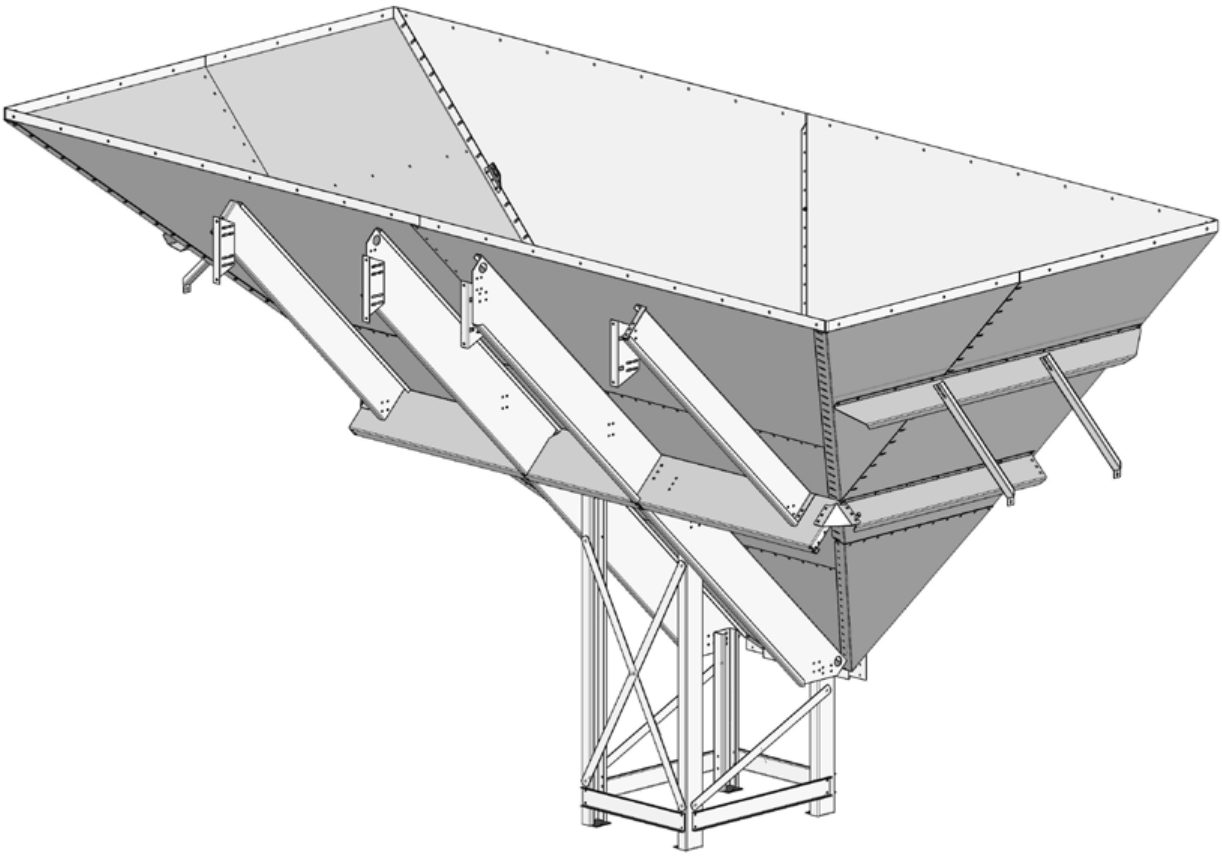

You'll see the difference

antti.fi

CONTENTS

Bolt-assembled hopper 3
Hopper pit (foundation) 4
Spare parts 6
Assembly 8

EU Declaration of Conformity 13

Read the Installation and Instruction Manual carefully before installing the hopper and putting it into operation.

Safety

Follow the local instructions for occupational safety.

When assembling, take into account that the plates are large and heavy. Two fitters and a decent lift are minimum requirements. The assembly can be carried out using ordinary tools.

The ready-assembled hopper shall be lifted using four chains, which makes the installation into the concreted hopper pit easy.

Bolt-assembled hopper

The bolt-assembled hopper is designed for grain dryers with silo elements measuring 3.0 metres. The hopper is therefore suitable for dividing the elements and the foundations remain simple. The hopper is therefore suitable for dividing the elements and the foundations remain simple. It is possible to connect an elevated A-series or E-series elevator to the hopper by means of an intake spout. During assembly, observe the model of the elevator, and the height position of the legs.

Packaging image 5x3

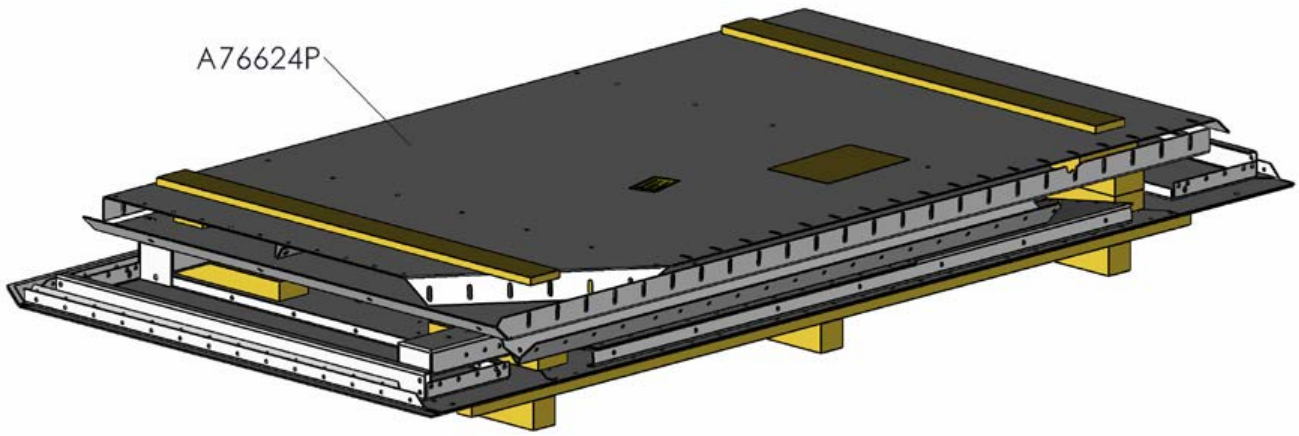

Hopper pit (foundation)

The bolt-assembled hopper is designed to be installed in a concreted hopper pit. When planning the pit, it is advisableto
design openings that provide access to underside of the hopper and facilitate the exchange of air. Thiswill inhibit the parts made of iron from getting corroded too easily.The dimensions of the hopper are to some extent adjustable, enabling the hopper to be fittedeven into a pit, thatdiffers slightly from the nominal size
Attach the upper edge of the hopper either using expander bolts or by welding to the bond plates, set in the concrete.
Attach the legs to the bottom using expansion bolts or by welding to the bond plates.The hopper's legs do not have to stand on a level surface – as necessary, their length can be adjusted by meansof pieces of sheet metal, for example.
For special applications, it is essential to make a sufficientlsturdy frame around the upper part of the hopper, andprovide legs that are sufficientlstrong to carry the load all the way down. Supporting the (vertical) rear wall is mandatory.
If the foundation is made by concreting, the wall will lean against a surface of concrete, and will not bend.

Opening in the foundation for the elevator connection

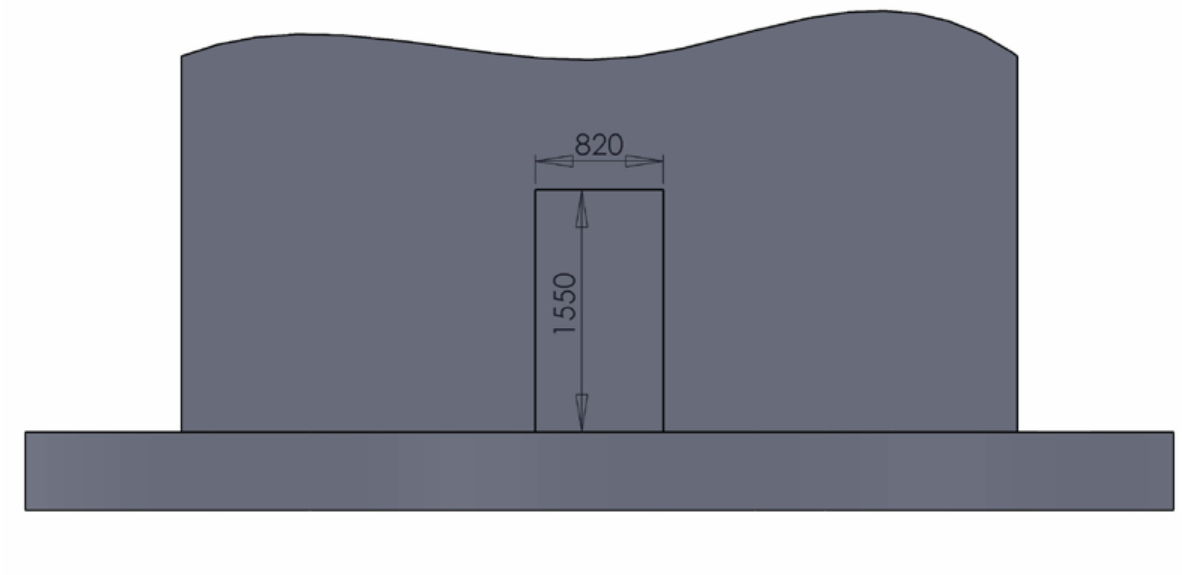

Dimensioning of the foundation and the adjustment reserves of the hopper.

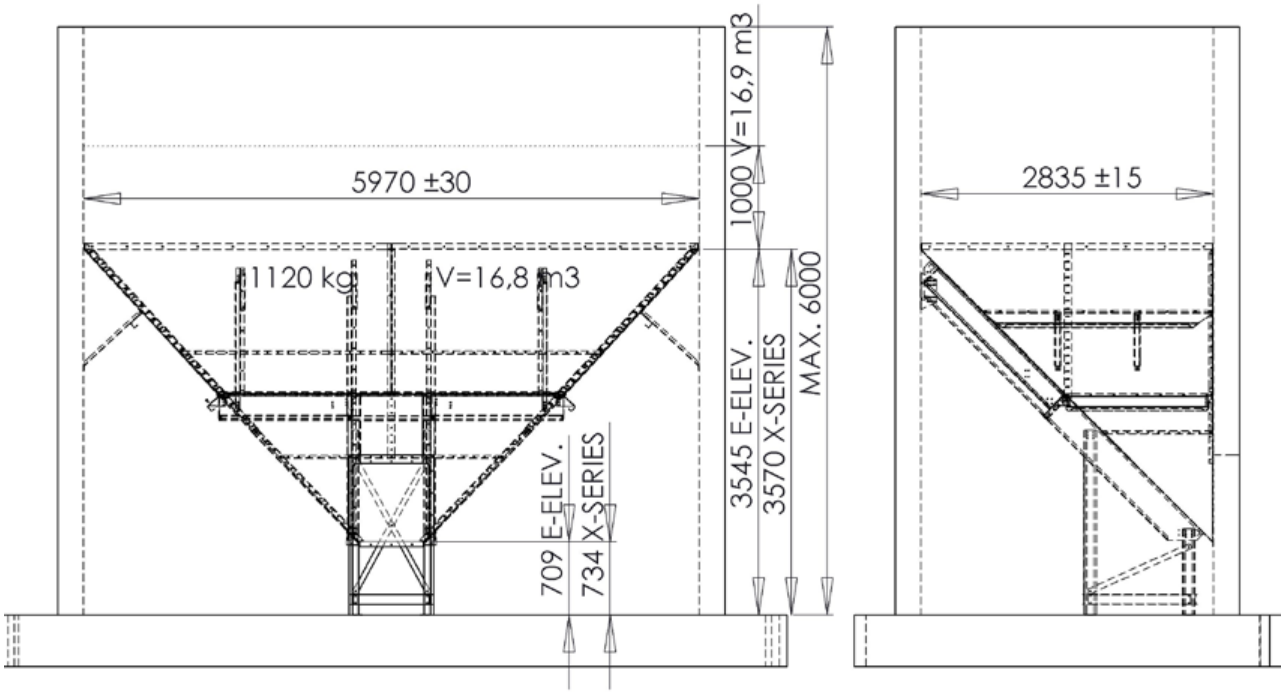

Distribution of the support beams of the walk-way grate

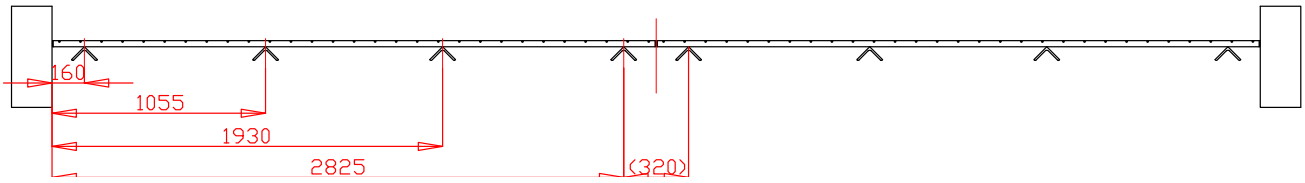

Spare parts

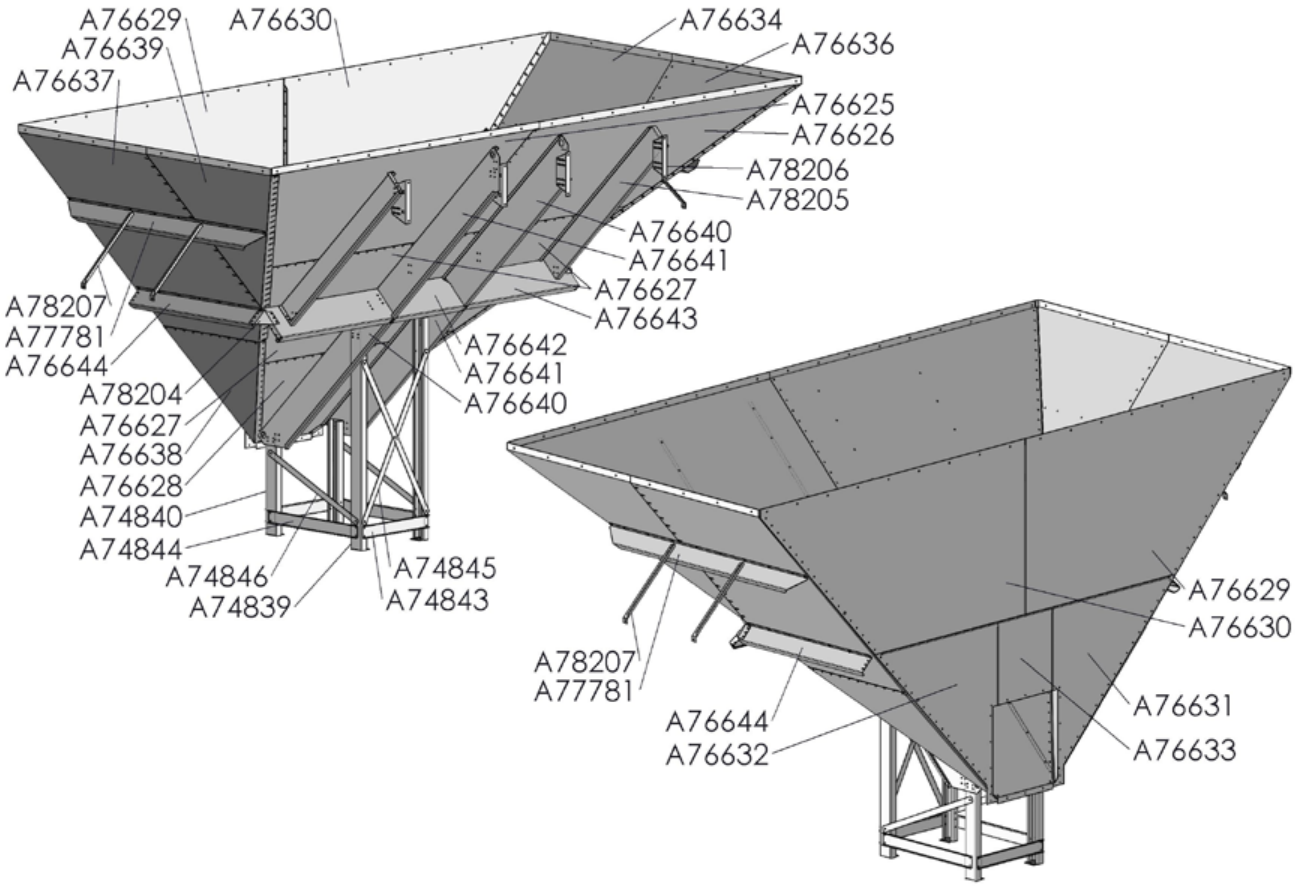
A76629
A76639
A76637
A76630
A76634
A76636
A76625
A76626
A78206
A78205
A76640
A76641
A76627
A76643
A78207
A77781
A76644
A76642
A76641
A76640
A78204
A76627
A76638
A76628
A74840
A74844
A74846
A74839
A74845
A74843
A76629
A76630
A78207
A77781
A76644
A76632
A76631
A76633

Part number	Denomination	Pcs	Weight
503017	LIFTING LUG 15KN PL4X150X160 30DEG	4	0,48
A76625	BOLT ON INTAKE HOPPER PLATE1 M21	1	89,24
A76626	BOLT ON INTAKE HOPPER PLATE2 M21	1	89,15
A76627	BOLT ON INTAKE HOPPER PLATE3 M21	2	55,2
A76628	BOLT ON INTAKE HOPPER PLATE4 M21	1	40,08
A76629	BOLT ON INTAKE HOPPER PLATE5 M21	1	83,14
A76630	BOLT ON INTAKE HOPPER PLATE6 M21	1	83,14
A76631	BOLT ON INTAKE HOPPER PLATE7 M21	1	24,22
A76632	BOLT ON INTAKE HOPPER PLATE8 M21	1	24,22
A76633	BOLT ON INTAKE HOPPER PLATE9 M21	1	11,26
A76634	BOLT ON INTAKE HOPPER PLATE10 M21	1	85,86
A76635	BOLT ON INTAKE HOPPER PLATE11 M21	1	23,24
A76636	BOLT ON INTAKE HOPPER PLATE12 M21	1	40,28
A76637	BOLT ON INTAKE HOPPER PLATE13 M21	1	85,86
A76638	BOLT ON INTAKE HOPPER PLATE14 M21	1	23,24
A76639	BOLT ON INTAKE HOPPER PLATE15 M21	1	40,28
A76640	BOLT ON INTAKE HOPPER STIFFNER1 M21	2	17,71
A76641	BOLT ON INTAKE HOPPER STIFFNER2 M21	2	17,71
A76642	BOLT ON INTAKE HOPPER HORI SUPPORT1 M21	1	7,84
A76643	BOLT ON INTAKE HOPPER HORI SUPPORT2 M21	2	12,93
A76644	BOLT ON INTAKE HOPPER HORI SUPPORT3 M21	2	9,52
A74839	BOLT ON INTAKE HOPPER LEG1 M13	2	11,83
A74840	BOLT ON INTAKE HOPPER LEG2 M13	2	5,54
A74843	BOLT ON INTAKE HOPPER LEG SUPPORT1 M13	2	2,24
A74844	BOLT ON INTAKE HOPPER LEG SUPPORT2 M13	2	3,04
A74845	BOLT ON INTAKE HOPPER SUPPORT M13	2	1,75
A74846	BOLT ON INTAKE HOPPER SUPPORT2 M13	2	1,28
A77781	BOLT ON INTAKE HOPPER SUPPORT2 M13	2	12,89
A78204	BOLT ON INTAKE HOPPER CORNER SUPPORT 3X6	2	1,89
A78205	BOLT ON INTAKE HOPPER SUPPORT 3X6	2	13,68
A78206	BOLT ON INTAKE HOPPER WALL BRACKET 1 6X3	4	1,55
A78207	BOLT ON INTAKE HOPPER WALL SUPPORT 2 6X3	4	3,83
800271	SEAL MASTIC GREY 290 ML SOUDAL Fix ALL Flexi	3	
131004	EXPANDER BOLT KA 12X100 ZN	68	
104259	BUTTON HEAD BOLT ZN 10.9 10X20 AM ISO 7380-1	420	
110540	NUT M8 ZN 8 DIN934	80	
107910	SCREW LOCK ZN M 8X16 DIN603 8.8	80	
111562	WASHER D28/D9X3 DIN440R ZN	50	
102270	HEXAGON FLANGE BOLTS 10X25 ZN 8.8 DIN 6921	110	
102273	HEX FLANGE NUT M10 ZN 8 DIN 6923	530	
111563	BRICKA M10 D34/D11X3 DIN440R ZN	100	

Assembly

The place of assembly must be level and steady, No sealants shall be used for the assembly. Seal up the joints last, when the hopper stands ready-installed in place.
It is advisable to use 3 pieces of wood, 50x100 L=3200 in size, as an aid to make installation of the bolts easier.

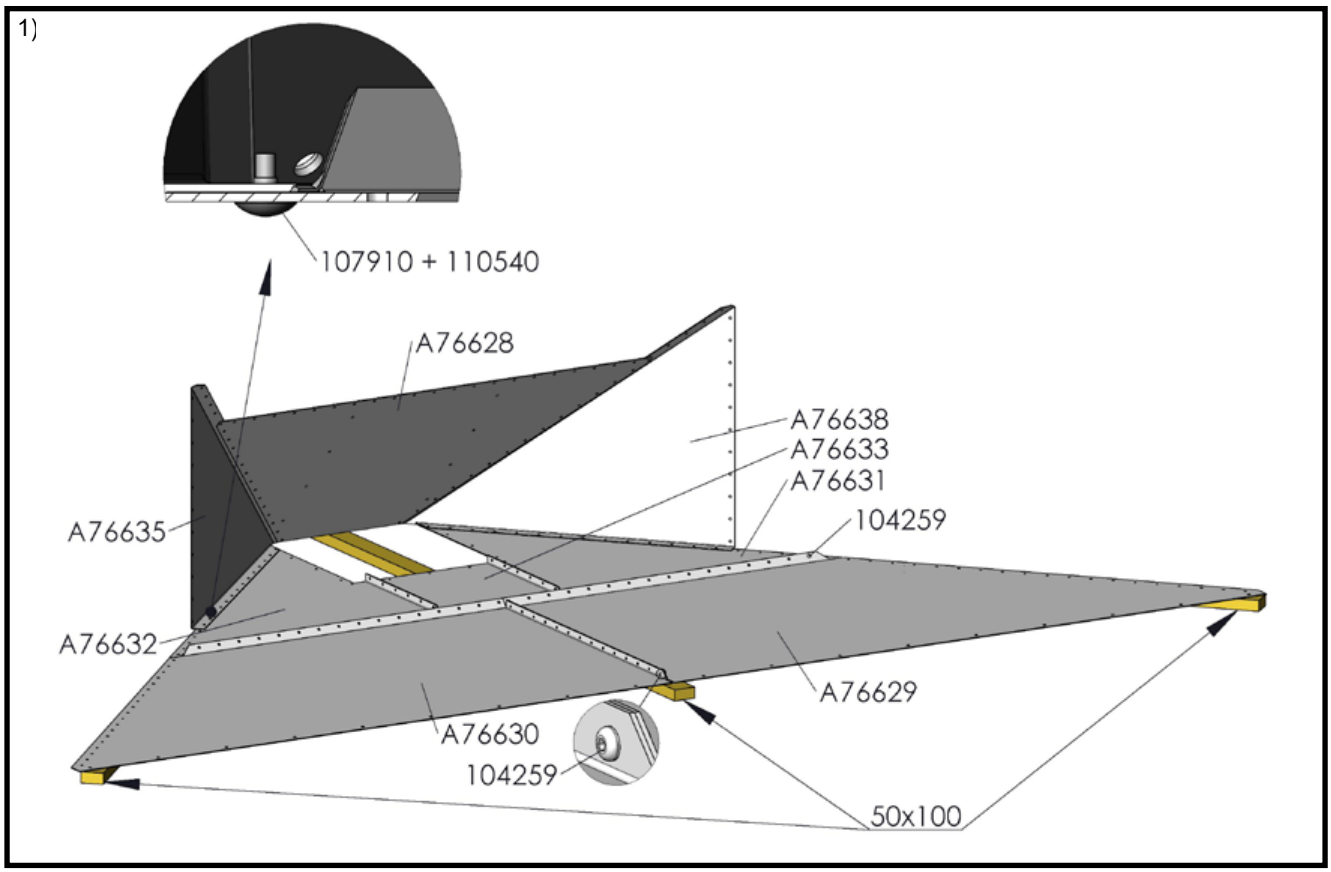

Fig. 1): Place the countersunk bolts with their caps pointing outward (against the concrete surface). Provide the long holes with a fender washer. Tighten all bolts.

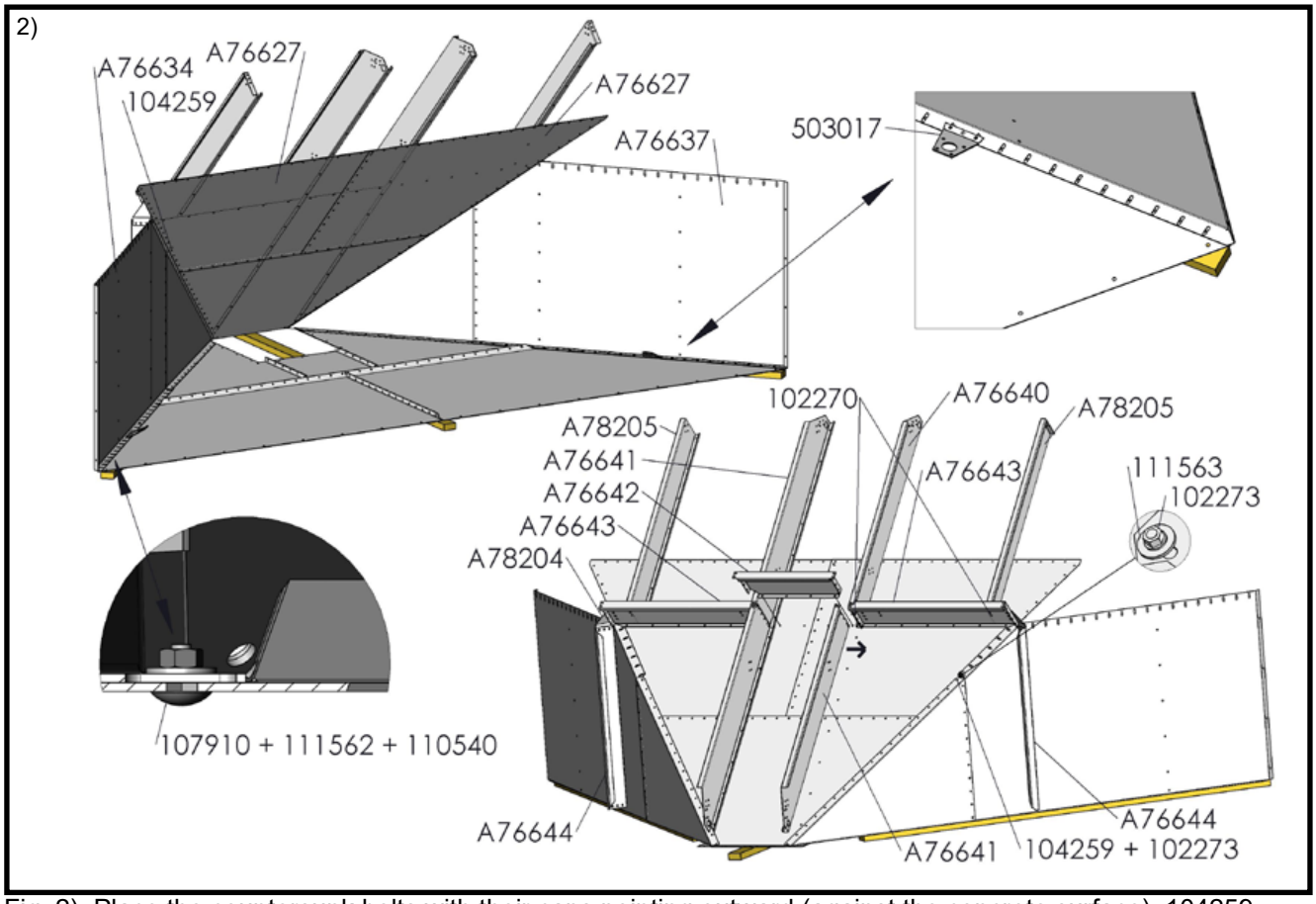

Fig. 2): Place the countersunk bolts with their caps pointing outward (against the concrete surface). 104259 button head M10, dome facing inward. Install the lifting lugs (4 pcs.). Leave the connections with the long holes loose (adjustment reserve).

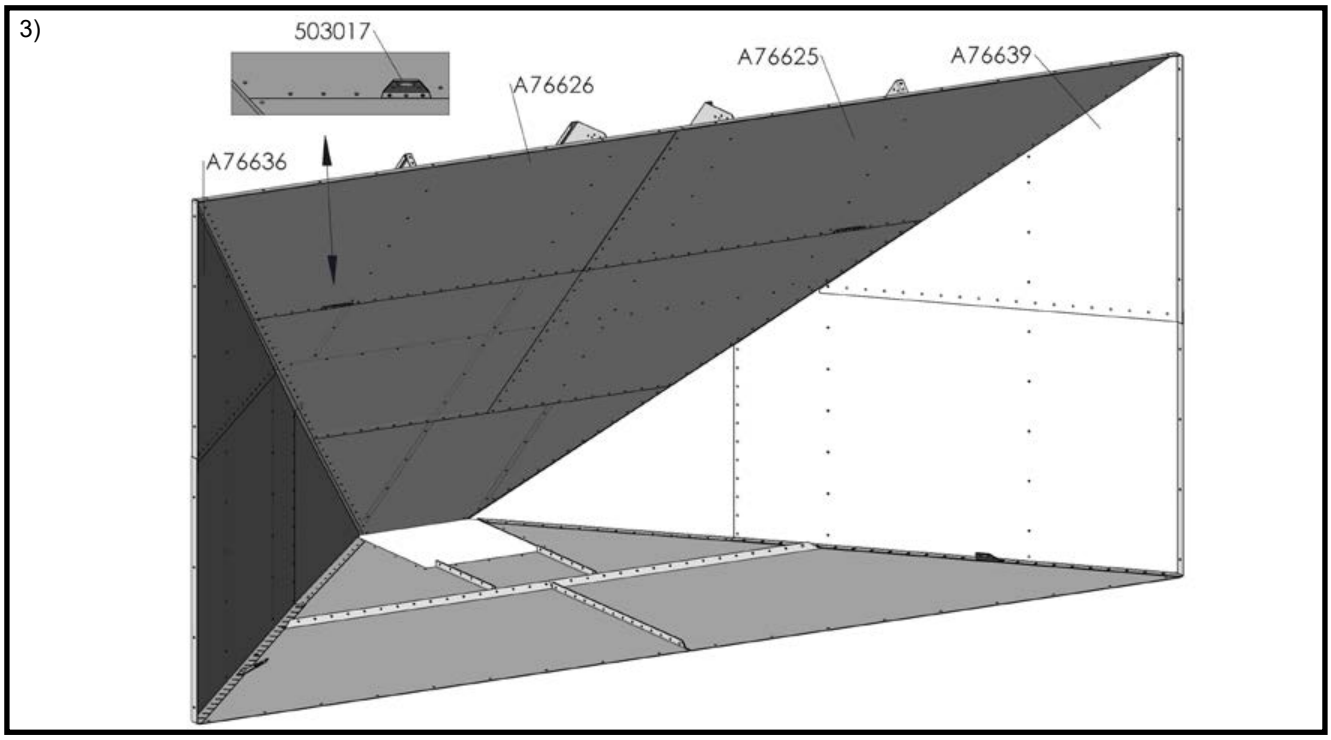

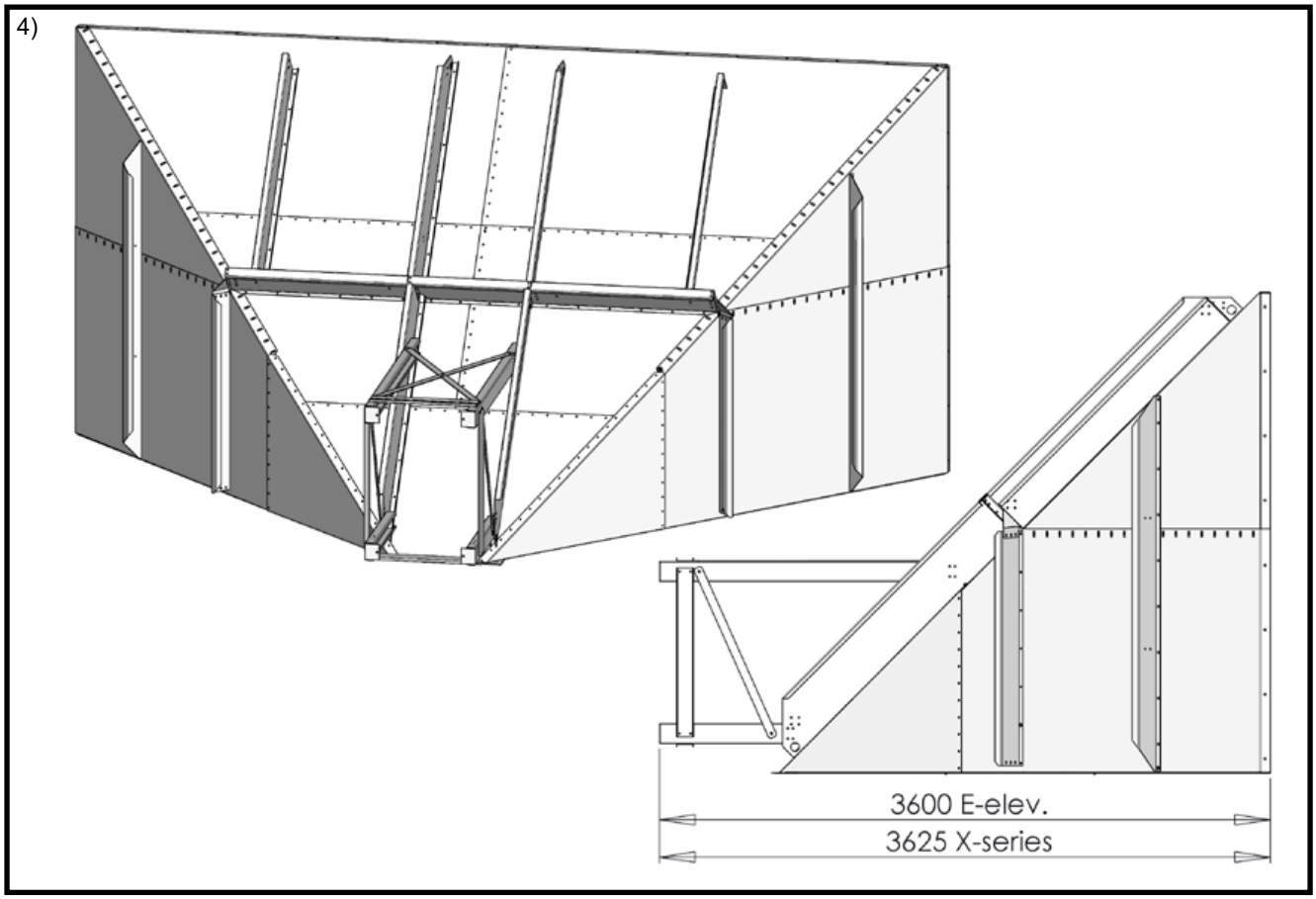

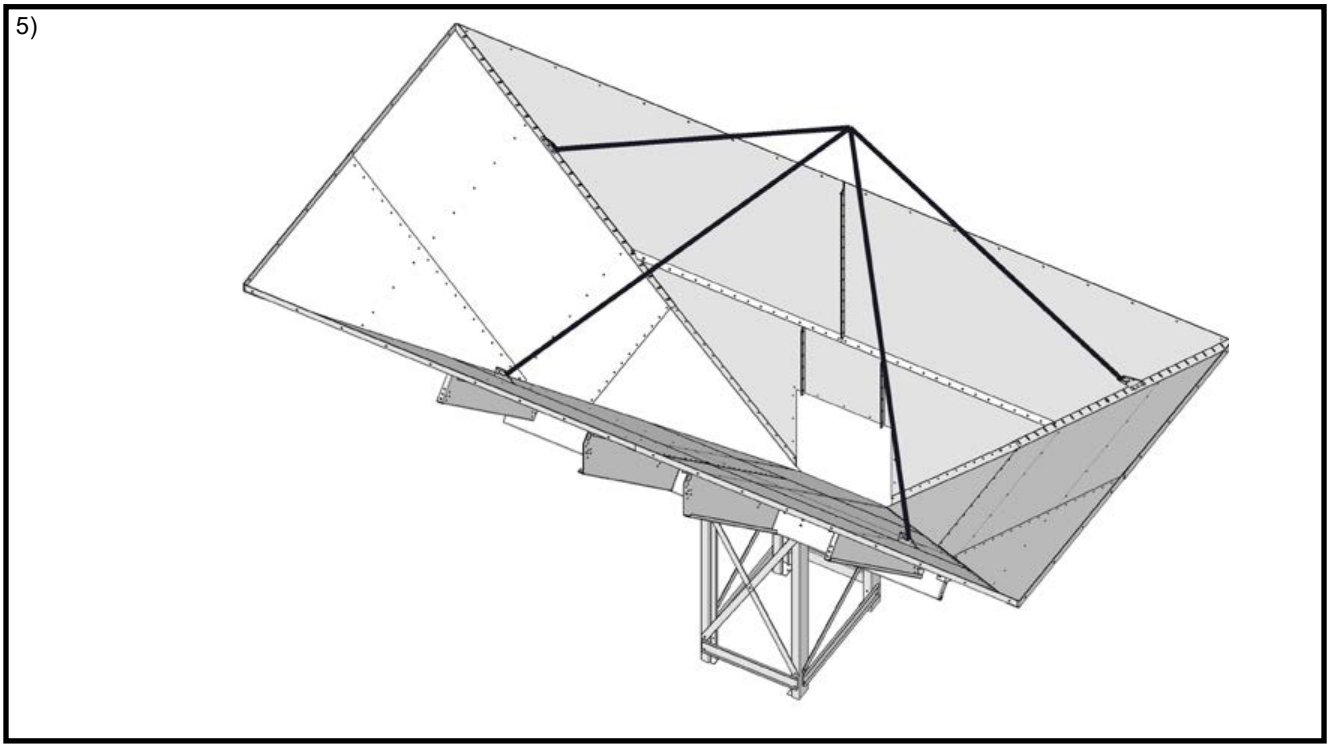

Fig. 5): Installation of the hopper into the pit requires sufficiently powerful lifting equipment. Use four chains for lifting.

6)

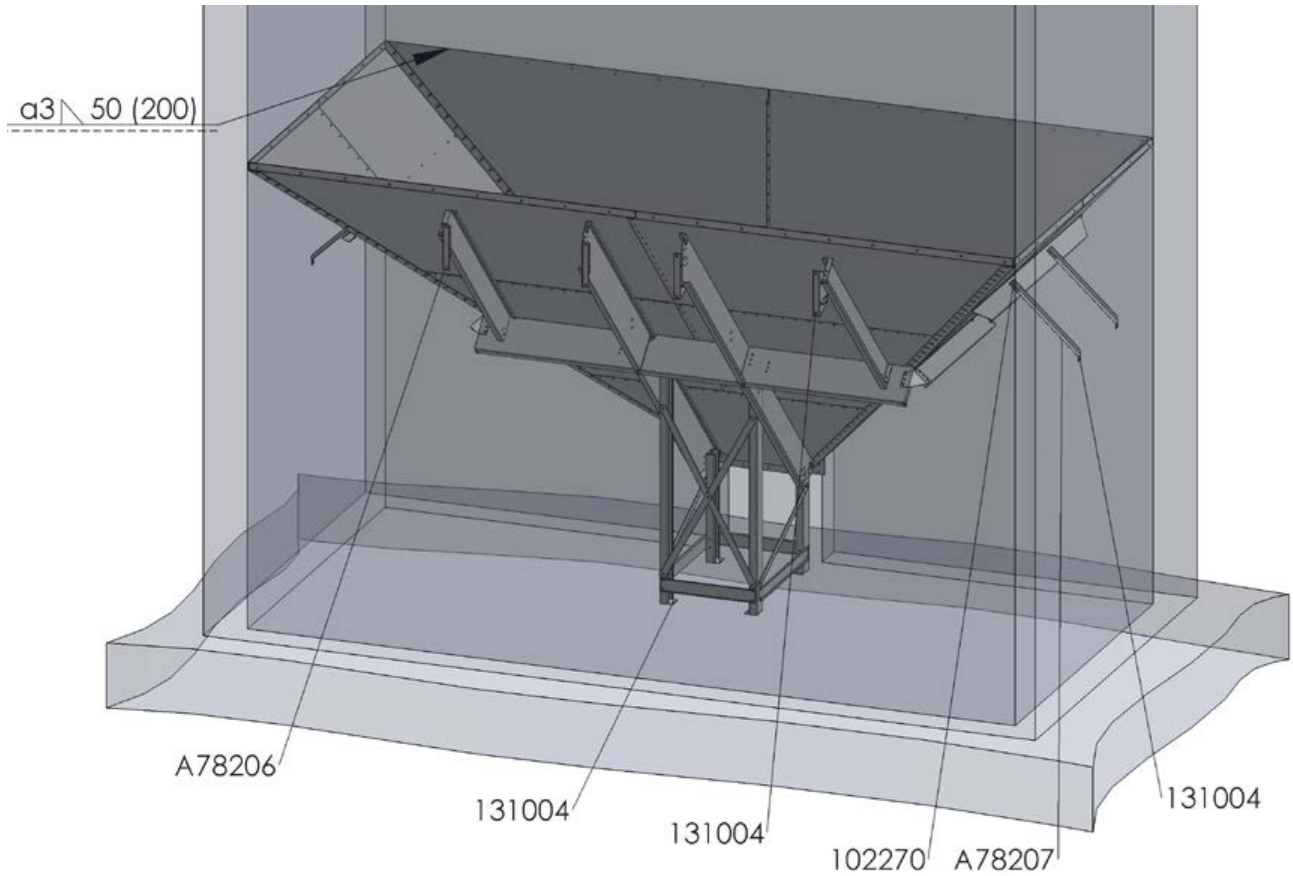

Fig 6): As soon as the hopper stands level, the legs can be attached to the foundation by means of expander bolts (131004, M12).
Once the bolts in the long holes are loose, the upper edge can be attached using expander bolts (M12) or by welding to the bond plates set in the concrete – the seams shall be at least 50 mm long at intervals of 200 mm.
The bolts in the long holes can be tightened as soon as the upper edge has been fixed.
After that, apply glue compound to seal up the joints of the overlapping plates, the corners, the chink between the concrete and the upper edge etc.

Install the remaining supports. Install A78206 on the beams, tightly against the concrete. If necessary, the support can be bent using the hole in the support. Secure it through the lower hole with a wedge anchor (131004, M12).
Install supports A78207 on the sides and secure them to the concrete with wedge anchors (131004, M12).

7)

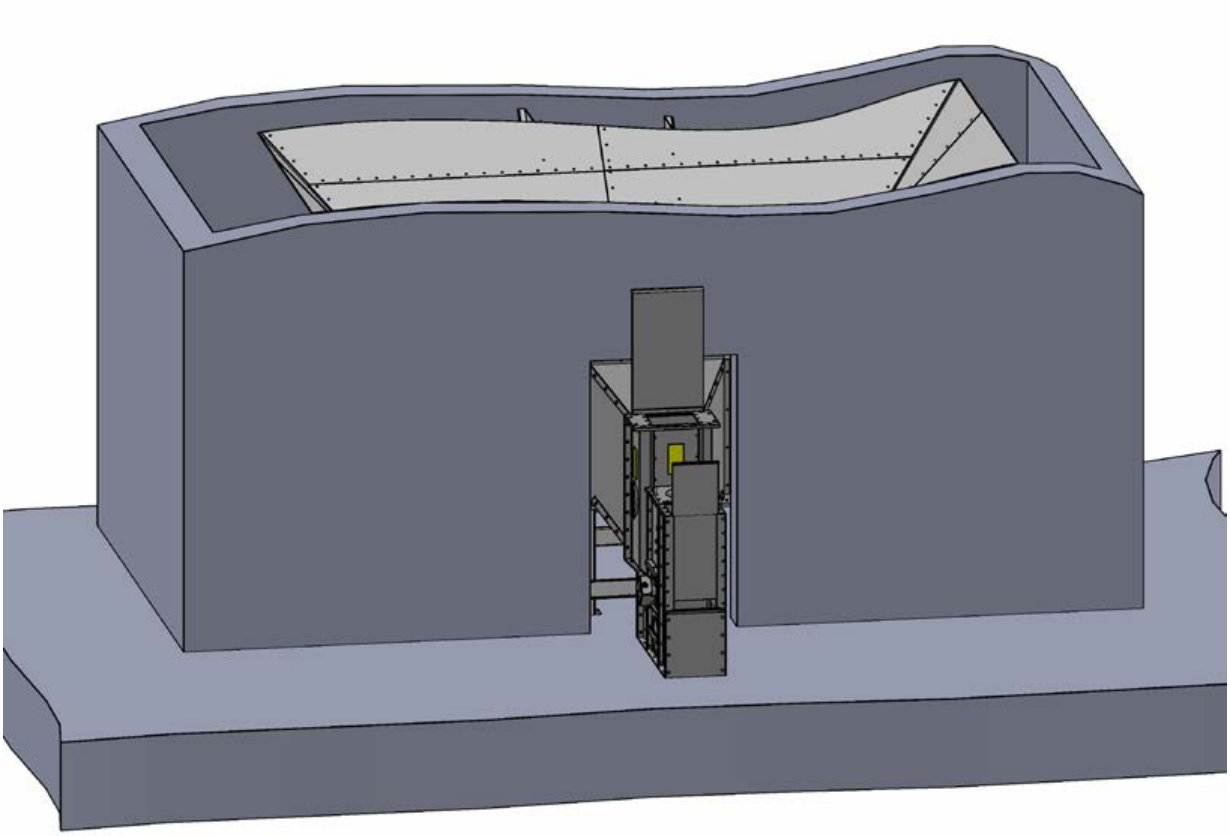

Fig. 7): Install the intake spout before installing the elevator. This way you can put the bolts in place through the spout. As required, drill holes into the lower edge of the connecting part.

EU Declaration of Conformity

ANTTI-TEOLLISUUS OY
Koskentie 89
FI-25340 KANUNKI; SALO
Tel.: +358 2 7744700

declares that

BOLT-ASSEMBLED HOPPER 6970 x 2835

conform with the provisions of the following directives:

- **Machine Directive 2006/42/EU**

Salo 02.01.2025

Kalle Isotalo
Managing Director